MATHEMATICAL MODELING OF INTERACTION OF THE ELECTRIC PROPULSION AND SPACECRAFT RADIOTEXNICAL SYSTEMS

I.P. Kozlov
Research Institute of Applied Mechanics and Electrodynamics (RIAME)
4 Volokolamskoye sh., Moscow, 125810,
Fax: (095) 1580367

Abstract

Mathematical modeling was used design the spacecraft (SC) antenna systems. Mathematical modeling was made accounting for the electromagnetic antenna interaction with the SC body and its overhanging parts or sharp edges at the electric propulsion thruster plasma blob. As theoretical researches show near to plasma critical density surface the behaviour of an electromagnetic wave qualitatively and quantitatively depends on small changes in parameters of medium[1-3]. It requires to use the exact solution of the diffraction problem and results in a new treatment of the problem of electromagnetic compatibility of SC radiotechnical systems. The diffraction theory for two bodies of complicated form for the spherical coordinates has been developed. New methods have been developed by the author to formulate an universal computation model for any body sizes. The effective computer algorithms for the antenna system have been developed. The results of numerical investigations are presented.

Introduction

Mathematical modeling can be used to design the spacecraft (SC) antenna systems. The system analysis theory may be used at the space program realization and the optimum one from the point of view of its technical characteristics and cost is chosen.

The problem of providing of the outer-space radio communication consists of calculation of the radio communication line in "space - space", "spacecraft - Earth" cases and the selection of an antenna system type, it's geometry and location onboard SC with electric propulsion thruster. A new method of accurate solution of the task on a flat electromagnetic wave propagation through a flat inhomogeneous dielectric layer of a given thickness has been developed[1-3]. The phenomenon of qualitative and quantitative dependence for the solution of problem of small variation of task parameters near zero permittivity (critical point $\varepsilon=0$) is discovered. It requires to use the exact solution of the diffraction problem and results in a new treatment of the problem of electromagnetic compatibility of SC radiotechnical systems.

Mathematical modeling is made accounting for the electromagnetic antenna interaction between each other and the SC body and its overhanging parts or sharp edges at the electric propulsion thruster plasma blob[4].

The diffraction theory for two bodies of complicated form for the spherical coordinates was developed. The wave amplitude transformation method while shifting and rotating the spherical coordinate system and the iteration method were developed by the author to formulate a universal computation model for any body sizes[4-6].

The effective computer algorithms for the antenna system are developed. There are results of numerical investigations with different cases classification and generalization.

Selection of the antenna system model

The problem of the provision of the outer-space radio communication has in mind calculation of the radio communication line in the cases - "space - space", "spacecraft - Earth" and the selection of an antenna system type, it's geometry and location on the SC, the determination of the functional principles in accordance with the prescribed AP. The difficulties of the antenna creation are bound up with the modeling of geometry of the antenna system and SC in the objects presence, that disturb antenna field, for example, such as the protruding elements of the SC, sharp edges, artificial plasma formations or an atmosphere of planets. The existence plasma with the critical concentration for the radiated wave (the dielectric penetrability get a size as zero.) The presence of the above - mentioned peculiarities requires to refuse of the models which were connected with the geometrical octave and the ray geometry in the case of the radiation propagation.

The selection of the physical and mathematical model greatly depends on the presence of the so called resonance region $L\sim l$ near zone $R\sim\lambda$ (where L, R are the characteristic dimensions of an obstacle and the distance of antenna to obstacle accordingly.

The present report is devoted to the description of the mathematical model method, as the preliminary stage of the SC antenna systems designing. The peculiarities are determined by geometry of the antenna and the surrounding it's space, when it is necessary to get strict decisions of diffraction problems.

The proposed computation of the antenna system models infers the selection of the geometrical parameters of the SC, the antenna

Copyright @ 1999 by the Japan Society for Aeronautical and Space Sciences. All rights reserved

and its location on the SC.

The mathematical method operates with spherical coordinates, therefore the geometry of the two body system consist of the following alone bodies for any excitation sources:

- the conducting disk, that is adjointed with two conducting hemispheres (Fig.1);
- the non-homogeneous dielectric sphere without central symmetry (Fig.2);
- the antenna array on conducting hemisphere with disk (Fig.3).
-

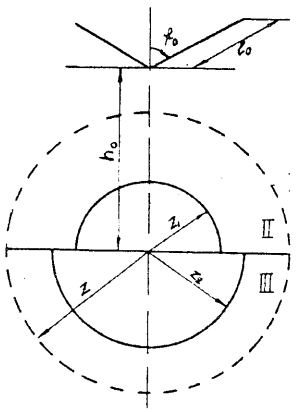

Fig.1

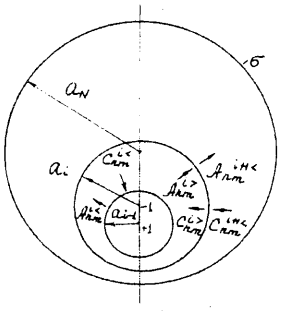

Fig.2

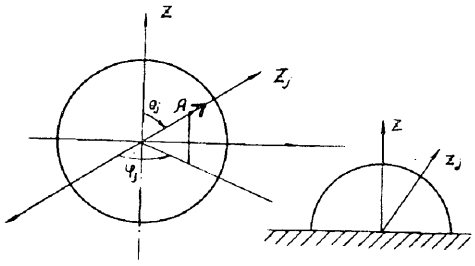

Fig.3

The external excitation sources are described by sinusoidal current, that was given on vibrators, or slots or by any flat wave.

The investigation of the influence of the non-homogeneous media is considered in the propagation problem of the flat electromagnetic wave through the plasma formation of the unspecified dimension.

The wave diffraction for two bodies

The solution of the Maxwell equations may be represented through U(r,θ,φ) and V(r,θ,φ)[8]:

$$U(r,\theta,\varphi)=\sum_{m=0}^{\infty}\sum_{n=1}^{\infty}\{U_{nm}\}P_n^m(\cos\theta)\begin{matrix}\varsigma_n^{(1)}(\rho)\\ \psi_n(\rho)\end{matrix},$$

$$r \gtrless r',$$

$$U_{nm}=\begin{matrix}A_{nm}\\ C_{nm}\end{matrix}\cos(m\varphi)+\begin{matrix}B_{nm}\\ C_{nm}\end{matrix}\sin(m\varphi),$$

$$V_{nm}=\begin{matrix}\overline{A}_{nm}\\ \overline{C}_{nm}\end{matrix}\cos(m\varphi)+\begin{matrix}\overline{B}_{nm}\\ \overline{C}_{nm}\end{matrix}\sin(m\varphi),$$

where $\rho=\sqrt{\varepsilon\mu}\,r$, $\zeta_n^{(1)}(\rho)$, $\psi_n(\rho)$, $P_n^m(\cos\theta)$ are fundamental spherical functions and r' defines the region that's occupied by the sources.

The field components along axis 0z from 0_1 to 0_{-1} with replaced centres of two local spherical coordinate systems are described by the following relationships[5]

$$r_sE_{r_s}=(r_{-s}+sa\cos\theta_{-s})E_{r_{-s}}-sa\sin\theta_{-s}E_{\theta_{-s}}, \quad (1)$$

$$r_sH_{r_s}=(r_{-s}+sa\cos\theta_{-s})H_{r_{-s}}-sa\sin\theta_{-s}H_{\theta_{-s}} \quad (2)$$

where s=±1, a is the distance between 0_s and 0_{-s}.

The wave amplitudes' transformations were received by author on the base of (1), (2) by application of the addition theorems for spherical functions[5]

$$\begin{matrix}C_{nm}^s\\ \overline{D}_{nm}^s\end{matrix}=\sum\left\{\alpha_{nmj}^{-s}\begin{matrix}A_{jm}^{-s}\\ \overline{B}_{jm}^{-s}\end{matrix}+\frac{I}{\omega_i}\overline{\alpha}_{nmj}^{-s}\begin{matrix}\overline{B}_{jm}^{-s}\\ -A_{jm}^{-s}\end{matrix}\right\},$$

$$\begin{matrix}C_{nm}^s\\ \overline{D}_{nm}^s\end{matrix}=\sum\left\{\gamma_{nmj}^{-s}\begin{matrix}C_{jm}^{-s}\\ \overline{D}_{jm}^{-s}\end{matrix}+\frac{I}{\omega_i}\overline{\gamma}_{nmj}^{-s}\begin{matrix}\overline{D}_{jm}^{-s}\\ -C_{jm}^{-s}\end{matrix}\right\}, \quad (3)$$

s=±1, and for $A_{nm}^s, \overline{B}_{nm}^s$ similar to (3), where $\omega^2=\mu/\varepsilon$. It is the solution for the harmonic cosmφ E-wave and sinmφ H- wave.

The use of the wave amplitudes transformations (shift) bring to the E- and H- waves mutually dependence. The addition theorem for the spherical function has been used falsely in some addition work[9], where instead of the field superposition principle - the scalar potential superposition principle was used[5].

The diffraction problem for the two dielectric sphere is considered. It is the local spherical coordinate system with the centre 0_s, and each body surface is R_s (surfaces R_s must not be intersected). The set currents (for any exitation sources) with amplitudes $A_{nm}^{0s}, \overline{B}_{nm}^{0s}, C_{nm}^{0s}, D_{nm}^{0s}$ for

the centre 0_s are introduced. The fields for the common region near the surface R_s (centre 0_s) depended on the bodies interaction and may be introduced by unknown wave amplitudes $A^s_{nm}, \overline{B}^s_{nm}, C^s_{nm}, D^s_{nm}$.

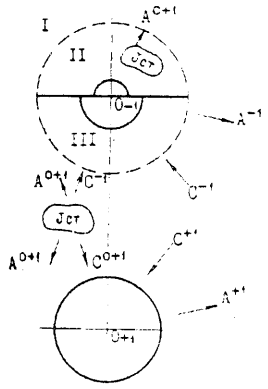

The wave diffraction problem for the single body (for centre 0_{+1}) is considered at first for the homogenious dielectric sphere. The boundary conditions for wave amplitudes' relationships are following:

$$A^1_{nm} = a_n C^{O1}_{nm}, \quad \overline{B}^1_{nm} = b_n \overline{D}^{O1}_{nm}, \quad (4)$$

In turn the solution for the secluded inhomogenious dielectric sphere, that consists of the inserted one into other disjoint homogeneous spheres, for the excitation with arbitrary set currents is infinite system of linear equations for wave amplitudes[5]. This solution can be formally represented in the local system in the form:

$$L^{-1}\left(A^{-1}_{nm}, \overline{B}^{-1}_{nm}, C^{0-1}_{nm}, \overline{D}^{0-1}_{nm}\right) = 0, \quad (5)$$

In turn the solution for the secluded perfectly conducting disk ($r=r_1$, $\theta = \pi/2$), that conjugate with two perfectly conducting hemispheres ($r=r_2$, $\theta < \pi/2$; $r=r_3$, $\theta > \pi/2$) for the exitation with arbitrary set currents is infinite system of linear equations with wave amplitudes[10]. This solution can be formally represented in the local system in the form:

$$L^{-1}(A^{-1}_{nm}, \overline{B}^{-1}_{nm}, C^{O-1}_{nm}, \overline{D}^{O-1}_{nm}, A^{O-1}_{nm2}, \overline{B}^{O-1}_{nm2}) = 0, \quad (5')$$

When the problem of diffraction is considered for the single body the influence of the adjacent body may be taken in account by the way of the changes in (4) and (5)

$$C^{0s}_{nm} \to C^{0s}_{nm} + C^{0s}_{nm}, \overline{D}^{0s}_{nm} \to \overline{D}^{0s}_{nm} + D^s_{nm}, \; s=\pm 1.$$

The equations (4), (5) and the wave amplitude transformation (3) constitutes the complete infinite system of linear equations for wave amplitudes $A^s_{nm}, \overline{B}^s_{nm}$, s=±1, and its solution gives required result.

In general the accurate solution of diffraction task for two bodies, partially described by coordinate surfaces of spherical system coordinates, is given. The unknown wave amplitudes are defined near each body. Fields in the local coordinate systems are summarized in common region. Relationships of the wave amplitudes' transformations and the boundary conditions for wave amplitudes constitute the complete infinite system of linear equations for unknown wave amplitudes.

The antenna array on disk with hemisphere

The antenna array calculating method for the sphere and for the hemisphere with the disk is proposed[4]. The local spherical system (r, θ, φ) (it's centre is the centre of the sphere) is standed on the antenna, and in which case the polar axis is the symmetric axis of the antenna.

By means of the addition theorem for joined Legander function's the wave amplitudes transformation has been received for the rotation between the system (r, θ_p, φ_p) and system (r, θ, φ)

$$\begin{matrix} A^p_{nm} \\ \overline{A}^p_{nm} \end{matrix} = \sum_{j=0}^{m} \left\{ \begin{matrix} \cos m\varphi \; Pc_{jmn}(\cos\theta_{p0}) \dfrac{A^0_{nj}}{\overline{A}^0_{nj}} - \\ - \sin m\varphi \; Ps_{jmn}(\cos_{p0}) \dfrac{B^0_{nj}}{\overline{B}^0_{nj}} \end{matrix} \right\},$$

there $A^0_{nm}, B^0_{nm}, \overline{A}^0_{nm}, \overline{B}^0_{nm}$ - are set wave amplitude antenna field for system (r, θ_p, φ_p) with consideration spherical boundary conditions.

By means of summing the amplitudes from the separate antenna with the set currents and using the disk model with the hemispheres the problem's decision will be found.

Wave propagation in plane layer

General solution of the physical problem, model 1, that is near to the basic one, is considered in this paper under small changes of initial data. They are absorption, angle of wave incidence $\theta_1 << 1$, function ε(z) is near zero value of ε, $0 < \varepsilon_L > \varepsilon > \varepsilon_N < 0$, $gr(\varepsilon_L) > 20$, replacement of $gr(\varepsilon')(\varepsilon')^{3/2} = const$ by $gr(\varepsilon') = const$ where $gr(\varepsilon') = -\alpha/(\varepsilon')^{3/2}$, $\alpha = \{d\varepsilon'/d(kz)\}$, $\varepsilon'' << \varepsilon_1$, $\varepsilon'' << \alpha^{2/3}$. A layer at $\varepsilon_L \to 0$, $\varepsilon''_L/\varepsilon_L = const$, becomes linear semiinfinite layer without absorption, thus $S/S_1 \to 0$. If $\varepsilon''_L/\varepsilon_L << 1$ then this layer is transformed to the layer for that $\varepsilon_N > 0$; thus the case $\varepsilon_N > 0$ corresponds to the model 2. Applicability criterion of the model 2 (under the replacement of semiinfinite linear layer) is the relationship $\varepsilon'' << 0.1\alpha^{2/3}$.

Investigations of the models 1 and 2 show that there exists qualitative dependence of the solution near zero value of ε on small changes of the physical problem parameters.

Applied solution method for model 2 allows to write reflection coefficients for E-waves as[2]:

$$\frac{C_E^n}{A_E^n}\exp(2i\rho_n) = R_{0E}^n = \frac{r_{nE} + R_{0E}^{n+1}\exp(i\Delta\rho_{n+1})}{1 + r_{nE}R_{0E}^{n+1}\exp(i\Delta\rho_{n+1})},$$

where n = 1,.,N-1, $\rho_n = \sqrt{\varepsilon_n'}\cos\theta_n k z_n$,

$$\delta_n = \frac{\sqrt{\varepsilon_n'}\cos\theta_n}{\sqrt{\varepsilon_{n+1}'}\cos\theta_n},\ \delta_{nE}=\delta_n\frac{\varepsilon_{n+1}'}{\varepsilon_n'},\ r_{nE}=\frac{\delta_{nE}-1}{\delta_{nE}+1},$$

$$R_{0E}^L = 0,\ R_E = R_{0E}^1,\ r_{nH}=\frac{\delta_{nH}-1}{\delta_{nH}+1},$$

$$\delta_{nH}=\delta_n,\ \Delta\rho_n = -2\sqrt{\varepsilon_n'}\cos\theta_n k(z_n - z_{n-1}),\ \Delta\rho_N = 0.$$

For H-waves index E should be replaced by index H in the above formulas. Under the way of division into uniform sublayers is supposed that $\delta^2=(\varepsilon_n-\varepsilon_0)/(\varepsilon_{n+1}-\varepsilon_0)$=const.

Let's estimate field strength values in the model 2 near the point of wave direction turn at $\varepsilon'' << \varepsilon_0$ according to[2]. It can be easy shown that for the case $\delta^{2n}(\theta_1)^2 >> 1$ the wave is propagated almost along the plane layer and thus $r_H \cong (\delta - 1)/2$, $r_E \cong r_H$; it means that solutions for R_{0H} and R_{0E} are nearly coincided in the area considered. Therefore, as the solution for H-waves is adequate that for the case of normal incidence after introduction $\varepsilon_\perp = \varepsilon(kz) - \varepsilon_0$, so if $|R_\perp| \to 1$ at $\varepsilon_\perp \to 0$, then at $\varepsilon_L \to \varepsilon_0$ take place relationships $|R_H| \to 1$, $|R_E| < |R_H|$; the latter is true as $r_E \cong -r_H$ at $\delta^{2n}(\theta_1)^2 << 1$. The sign change of r_E under θ_n decrease results in the fact that reflection coefficient comes throught zero value at $\varepsilon = \varepsilon_p$. In this sublayer exists only coming through wave with the direction of Poynting's vector determined from the relationship: $\varepsilon_0 = \varepsilon_p \sin^2\theta_p$. As a result, conditions are created for the appearance of surface E- waves; criterium for its appearance is the following: $\varepsilon''/\varepsilon_0 < 0.1^2$.

For the case considered, the following estimations are received. Let $r_E = 0$ at $z = z_m$; then $\varepsilon_m \cong 2\varepsilon_0$, $\theta_m \cong \pi/4$; $\varepsilon_p \cong 4\varepsilon_0$, $\theta_p \cong \pi/6$. If R = 0.8, then $\varepsilon_R \cong 0.002(\alpha_1)^{2/3}$. Therefore at $\varepsilon_p \cong \varepsilon_R$ it is received that for the case of surface E- wave propagation should be true the relationships: $\varepsilon'' << (10^{-4}...10^{-5})(\alpha_1)^{2/3}$ and $\varepsilon_1(\Delta\theta_1)^2 \cong (0.002)^2(\alpha_1)^{2/3}$.

Scattering of waves on plasma blob with the arbitrary dimensions

The decision for the plasma blob scattering is started by the wave passing in the ray optical solution (RO) approaching to the region, which may be defined by the criteria[1]. For the flat layer model it surface radius by over then λ and then non-uniform ball model is used.

Every ray of RO on surface of this sphere is represented as Huygen element of the plane wave. The set currents are placed in conformity to it. And finally we came to the problem of electromagnetic excitation by the set currents of the non-homogeneous sphere, which consists of the inserted one into other disjoint homogeneous spheres, centres of which are not superposed, but lie on an axis symmetry of formation (Fig.2)[6].

As before from continuity of tangential components of fields on surface of every homogeneous sphere we receive boundary conditions for amplitudes of waves in coordinate system with the centre 0_i. For going to coordinate system with centre 0_{i-1} the transformations of wave amplitude for the transition between two coordinate system with centres 0_i and 0_{i-1} are used with simultaneous variation of dielectric penetrability of the spheres and so on.

The computer models and results

The computer models are described by means of wave amplitudes: at this point geometry of vibrators, geometry of two bodies was chosen. Application programs consist of alone body programs: programs were called into play wave amplitude transformation with the iteration process and optimization (for any two bodies - Fig.1-3). The mathematical model of the system is chosen, the several possible variants are selected out from the (AP) computations to ensure the maximum AP proximity to the given one.

1. Antenna models. The antenna is introduced by a set currents of arbitrary orientation, for example, such as the vibrator, the ring and meridian crack. There is antenna with the disk (Fig.1), for example, and cross vibrator above the disk. The energy AP computations for cross vibrator above the disk are shown in Fig. 4 (m=1; kr_1=2.5; $r_2=r_3=0$; kl_0=1.1; 1 – kh_0=1; 2 – kh_0=1.8; 3 – kh_0=2.2).

2. The body models. The SC body is introduced by the disk with two hemispheres (Fig. 1), by two bodies, for example, spheres $kr \approx 4$. The computer study for models for any exiting sources demonstrate that for the main size the SC body L when $L > \lambda$, approximate decisions can be used. For $L < 0.1\ \lambda$ the SC form does not affect the AP. In the case of the cross antenna (for its size $L < 2\lambda$) the body form does not affect the probable AP. The probability character for optimum antenna parameter h_0=4.8, $f_0=30^0$, kl_0=0.8 is shown in Fig. 6.

3. The antenna model as the disk near the sphere, the two body model. The calculation for the cross vibrator as the disk r = 2 for the SC distance of up to λ show that the AP would be distored (Fig 7, m=1; kr_1=2.5; $r_2=r_3=0$; kl_0=1.1; kh_0=1; $f_0=110^0$).

4. The antenna array model for the hemisphere and the disk. For three symmetric antennas of round polarity ($\theta=10^0$, R=3λ it was calculated that the array secures AP of over than 5 for the angle of up to 50^0 (Fig.8). The disk does not influence the

AP.as AP parameters are the same for the main direction in case of $\theta_1=70^0$, r=0.5λ for different array sizes, but are different at side petals. Metallic, dielectric spheres and disks could be considered as the obstacle in the near zone of antenna array.

5. The model of the sphere on the ideal conducting surface. For sphere r=λ/2 the optimum antenna parameter was calculated and it is given in Fig. 9. Surface generating currents may be neglected for r=λ /2 and H>2 λ and for r=λ and H > 4λ (H is the distance between the sphere and the flat surface).

6. The model of the plasma region of any size near the disk and hemispheres. This model may be used for the investigation of the flat wave scattering in the plasma region and as the plasma antenna model. The task on a flat electromagnetic wave propagation through a flat inhomogeneous dielectric layer of a given thickness from x_1 to x_N (ε_1, ε_N) has been developed and calculated. In case of the wave streaming on the layer perpendicularly and assuming zero absorptions in the layer for $gr(\varepsilon_1)=20$, $gr(\varepsilon)=(d\varepsilon /dkz)/\varepsilon^{3/2}$, the calculation for R and E are shown in Fig. 11: 1 - $\varepsilon_1/\varepsilon_N=0.2\ 10^4$; 2 - $\varepsilon_1/\varepsilon_N=0.2\ 10^6$; 3 - $\varepsilon_1/\varepsilon_N=0.2\ 10^9$.

In conclusion we'd like to say that the comparison computer results with known computer data and experimental ones are satisfactory. The computer model may be summarized on the asymmetric system with some bodies.

Conclusion

The problem of electromagnetic wave propagation in the nearly plane heterogeneous weakly absorbing dielectric layer is solved. Phenomenon of qualitative dependence of the near zero permittivity (critical point) solution of the problem on small variations of it's parameters is discovered. The author's mathematical methods in the case of plane and spherical coordinate systems is applied. Surface wave propagation in plane layer is described and criterium of this wave appearance is given.

Mathematical modeling is used to design the spacecraft (SC) antenna systems. Mathematical modeling is made accounting for the electromagnetic antenna interaction with the SC body and its overhanging parts or sharp edges at the electric propulsion thruster plasma blob. It is found out that the field investigations in known task of electromagnetic wave propagation and diffraction near the critical point (ε=0) present serious difficulties. It requires to use the exact solution of the diffraction problem and results in a new treatment of the problem of electromagnetic compatibility of SC radiotechnical systems. Some difficulties can be eliminated by applying the presented methods of accurate solution of a wave diffraction and propagation problems in plane and spherical geometries. The diffraction theory for two bodies of complicated form for the spherical coordinates was developed by the author to formulate an universal computation model for any body sizes. The effective computer algorithms for the antenna system are developed.

References

[1] Kozlov I.P.Radiotekhnika i electronika, Vol.42, N2, pp. 142-146,1997 (in Russian).

[2] Kozlov I.P.\Electodinamika i technika SVCH i KVCH, T.4,N4,M.,1996.C.63-69(in Russian).

[3] Kozlov I.P.Vectnik MAI. 1997. T.4. №2. C.37-41(in Russian).

[4] Kozlov I.P.Mathematic Methods of Spacecraft Antenna System Designing, (IAF-94 -U.2.469), 45-th Congr. of the Int. Astr. Federation,Oct. 9-14,1994/Jerusalem,Israel,4p.

[5] Kozlov I.P.Izv. vuzov. Radiofisika. 1975. Vol.18. N7. P.997-1008 (in Russian).

[6] Kozlov I.P.In: Electrom. wave difraction and propagation.,Moscow, MFTI,pp.104-113,1993 (in Russian).

[7] Bishaev A.M., Kalashnikov V.K., Kim V.//Fizika plazma, 1992,т.18, wip.6,C.698(in Russian).

[8] Vainshtein L.A.Electromagnatic waves, Radio i sviaz,1957, 440p.(in Russian).

[9] Ivanov E.A.The electromagnetic wave diffraction for two bodies. Minsk, Nayka i technika,1968,464p. (in Russian).

[10] Kozlov I.P., Jablochkin N.A.The electromagnetic wave diffractionfor the disk with the hemispheres. The report 72060771,VNTITCENTR,1973 (in Russian).

[11] Kozlov I.P.In: Electrom. wave difraction and propagation.,Moscow, MFTI,pp.74-80,1995 (in Russian).

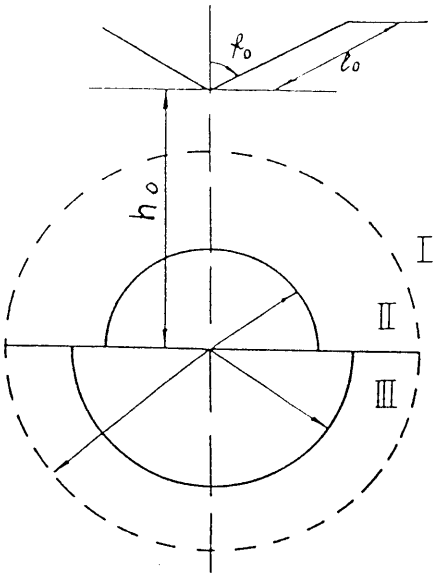

Fig. 1

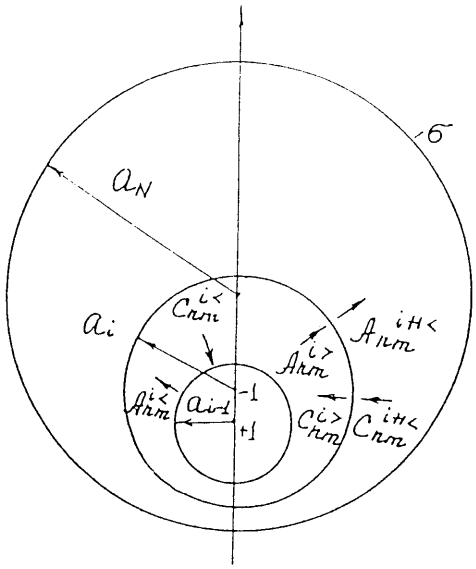

Fig. 2

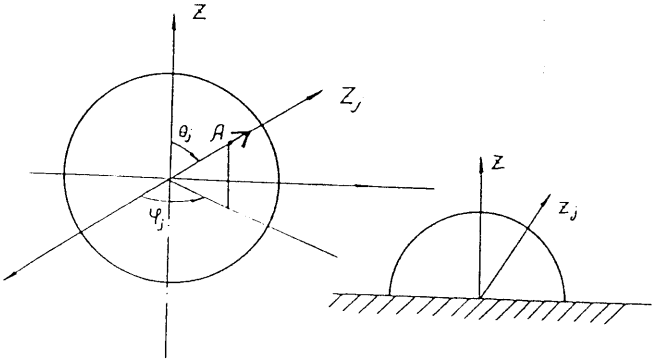

Fig. 3

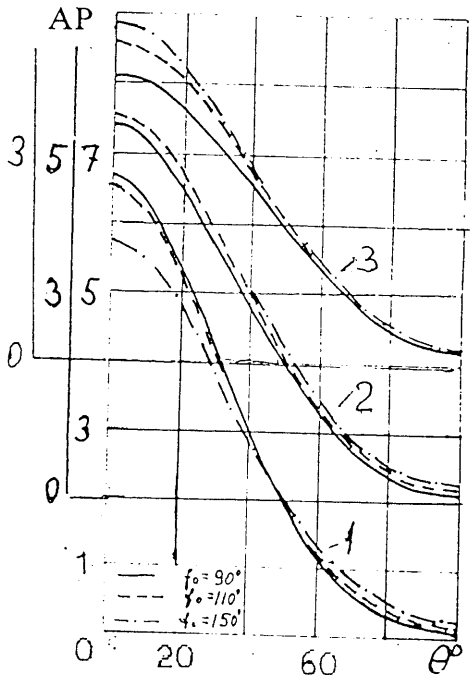

Fig. 4

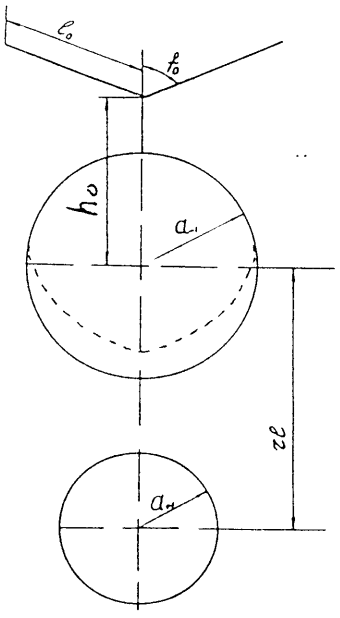

Fig. 5

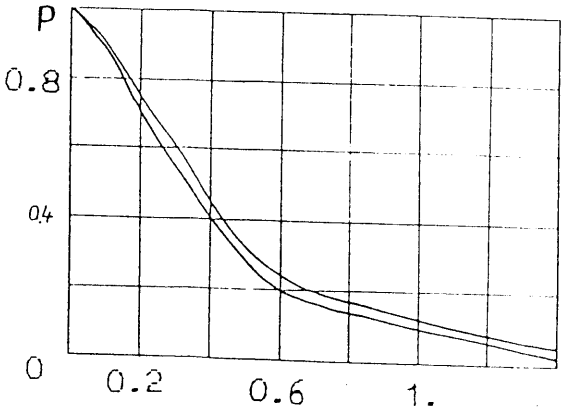

Fig. 6

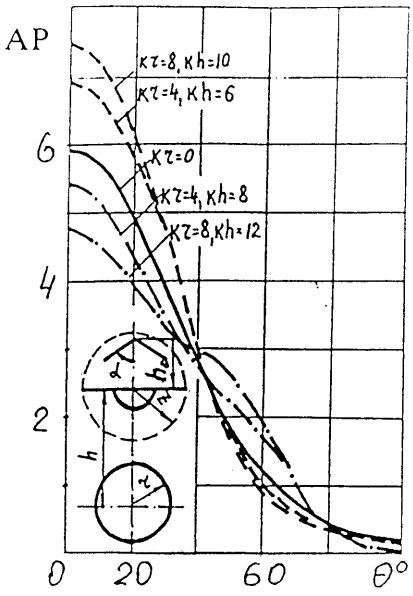

Fig. 7

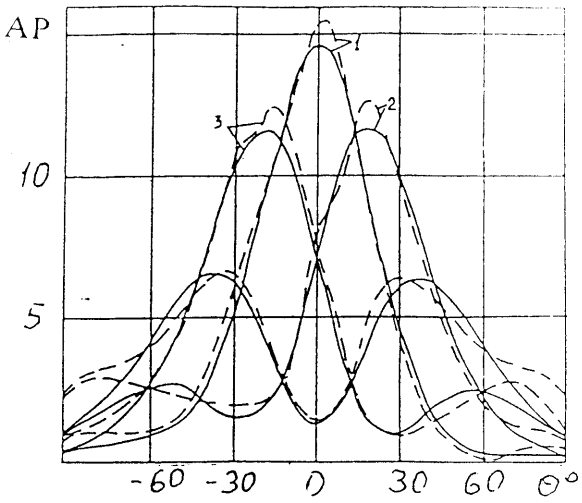

Fig. 8

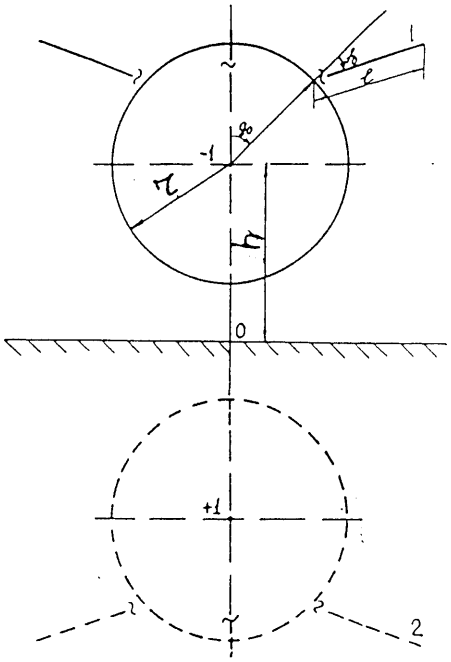

Fig. 9

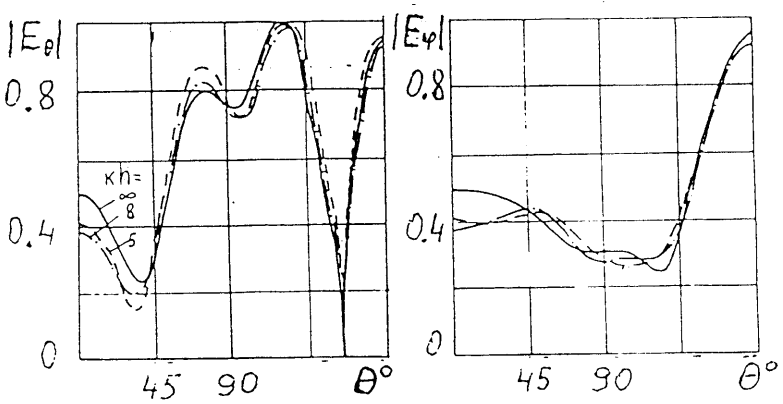

Fig. 10

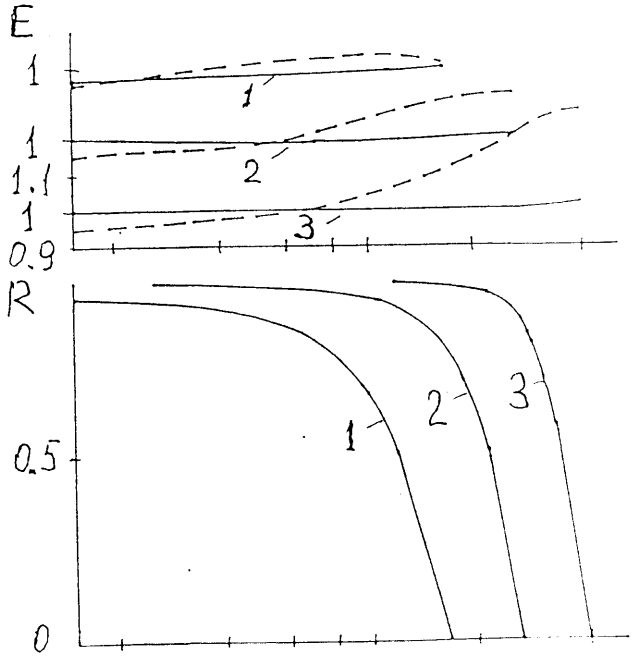

Fig. 11